FIREPLACE XTRORDINAIR®

DELUXE GAS FIREPLACE INSERT COLLECTION

NORTH AMERICA'S Lopi® FAVORITE FIRE

The World's Finest Collection of Gas Fireplace Inserts

"Over 40 years ago in 1979, I founded the Lopi® brand of premier stoves and fireplace inserts. Our reputation for solid craftsmanship, reliable performance and unbeatable heating efficiency has been a winning combination and the favorite fireplace insert of families across North America.

Ten years later, Travis Industries purchased Lopi® and we added the iconic Fireplace Xtrordinair® brand, known as North America's leader in premium fireplaces and fireplace inserts. These two fabulous brands have merged together under one roof to bring you the greatest collection of gas fireplace inserts in the world.

These fireplace inserts are the best money can buy. We have a worldwide reputation for award-winning innovations in fireplace insert design, and yet the most significant recognition to me is when a family entrusts us to be their fireplace insert of choice.

Take your time, enjoy looking through this catalog and keep the home fires burning."

Kurt W. F. Rumens,
President & Director of Product Design
Travis Industries, House of Fire

The 34 DVL Deluxe shown with the Lopi® Wilmington™ Face, Driftwood Fyre-Art™, Greystone™ Fireback and One-Piece Finish Panel

All Fireplace Inserts Are Not Created Equal

There are a lot of nice fireplace inserts out there that you might like. Allow us to introduce you to the greatest gas inserts in the world. We know you'll find one that you are going to love!

We offer four extraordinary models of premium gas burning fireplace inserts from both Lopi® and Fireplace Xtrordinair®. All four of these models embody the same attention to detail in design, aesthetics and construction. In fact, they all share many identical features, such as the high definition Ember-Fyre® II Burner, Ember-Glo™ ember bed lighting, your choice of three detailed log sets, six transitional fireback options, and our innovative GreenSmart® technology system.

The exterior look and style of designer faces are what distinguishes these models from one another.

The 32 DVS & 34 DVL models feature a wide selection of four-sided designer faces with beautiful styling that evenly surrounds the fire on all four sides. These models are the perfect choice for anyone seeking an architecturally balanced look with a timeless presentation of fire.

The 430 & 616 models offer a more contemporary look with three-sided designer faces that have minimal framing along the bottom. This extends the glass down to the hearth and creates a larger fireviewing area that resembles an open masonry fireplace.

Both Lopi® and Fireplace Xtrordinair® offer their own unique architectural styles of arched and rectangular designer faces for all of these insert models (see pages 14-19).

Incredible Performance

All of our inserts are excellent home heaters designed to provide radiant heat through the large fireviewing glass and natural convection through the heat exchanger. Incredible turndown rates and high efficiencies make these some of the most efficient gas burning inserts in the world.

No Power? No Problem!

Our gas fireplace inserts will work in a power outage.

Innovations

We are known the world over to be the most creative group of innovators and designers, bringing life to innovations such as:

- Ember-Fyre® II (page 4)
- GreenSmart® (page 23)
- Ember-Glo™ (pages 4 & 23)
- Comfort Control™ (page 23)

MID-SIZED FIREPLACE INSERTS - PAGES 6-9

32 DVS DELUXE

31,000 BTUs

430 DELUXE

31,000 BTUs

LARGE FIREPLACE INSERTS - PAGES 10-13

34 DVL DELUXE

40,000 BTUs

616 DELUXE

39,000 BTUs

New Ember-Fyre® II Burner Featuring 30% More Visual Fire!

Inspired by our popular award-winning Ember-Fyre® Burner, the new Ember-Fyre®II offers the next generation of high definition, wood-like burner technology. This stadium style burner features Ember-Glo™ ember bed lighting and multiple levels of dancing flames, to give you 30% more visual fire than any other insert brand with the same BTUs! Just like our original Ember-Fyre® Burner, Ember-Fyre® II provides a realistic looking fire with incredible attention to detail that makes it hard to distinguish from a wood burning fire.

Popular Science

EMBER-GLO™

AN INSERT FOR EVERY FIREPLACE

Turn Your Fireplace Into An Efficient Heat Source

Lopi® and Fireplace Xtrordinair® gas inserts allow you to enjoy a gorgeous, glowing fire without losing heat out of your chimney. These inserts are designed to transform virtually any masonry or zero clearance (metal) fireplace into an efficient source of heat. Traditional, open fireplaces can have efficiency ratings as low as 15%, and depending on the condition, can actually draw the heat out of your home for a net heat loss. Our heater-rated gas inserts achieve steady state efficiency ratings as high as 87%.

All of Our Gas Inserts Feature Direct Venting

All of our gas inserts feature an efficient co-linear direct venting system. This dual-liner system allows for direct venting through an existing masonry chimney with one liner to vent exhaust and the other liner to provide combustion air and maintain indoor air quality.

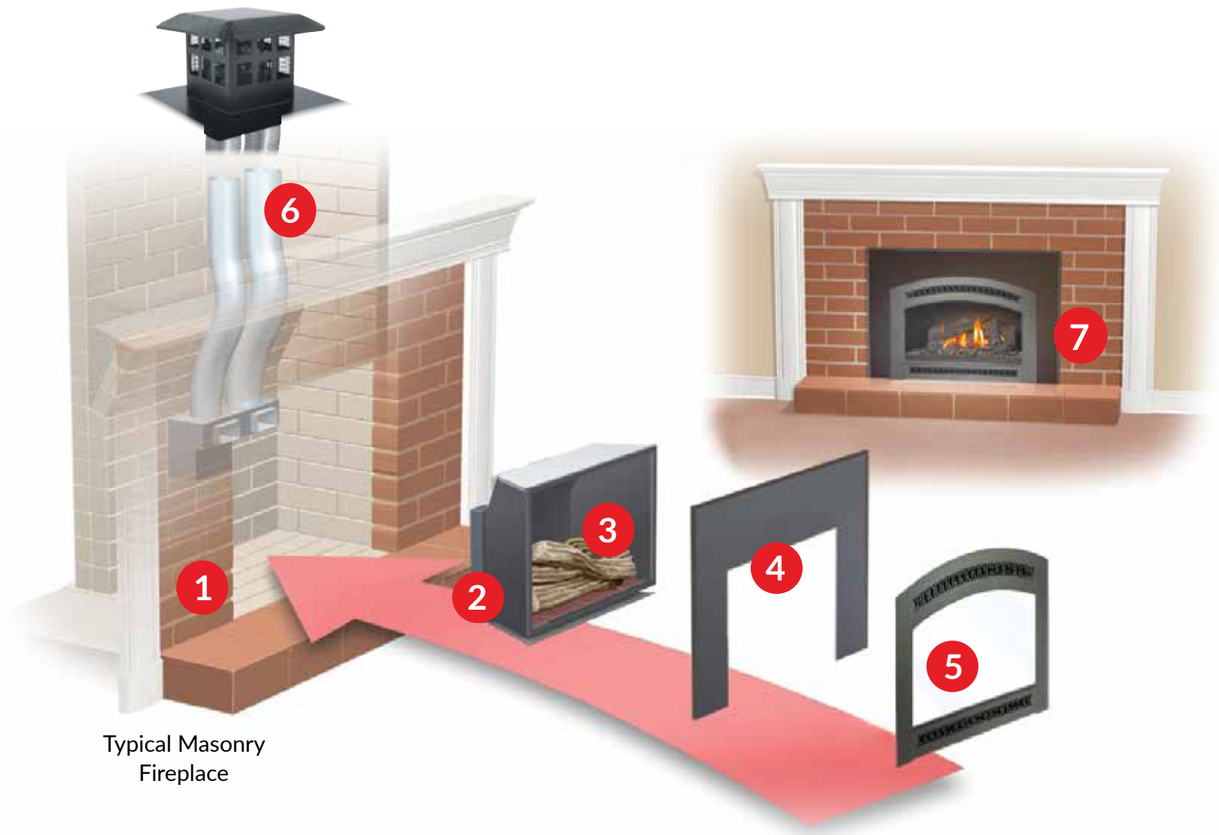

Typical Masonry Fireplace

1. Measure Your Existing Masonry or Metal (Zero Clearance) Fireplace
2. Select the Insert That Best Fits Your Fireplace
3. Choose A Log Set
4. Select A Finish Panel
5. Pick One of the Designer Faces
6. Add the Co-Linear Direct Vent Chimney
7. Enjoy the Heat!

The 32 DVS Deluxe shown with the FireplaceX® Classic Arch™ Face, Classic Oak Log Set, Handmade Brick Fireback, One-Piece Finish Panel and Hidden Wiring Kit.

32 DVS DELUXE WITH EMBER-GLO™ MID-SIZED GAS INSERT

Traditional 1,500 Square Foot Heater

The 32 DVS Deluxe is an efficient way to heat homes and living spaces up to 1,500 square feet. This mid-sized insert features a big ceramic glass viewing area, the incredible Ember-Fyre® II Burner and Comfort Control™, which allows you to turn down the heat output while maintaining the beauty of the fire. This model offers you the choice of high definition detailed log sets and a wide variety of designer faces. The 32 DVS Deluxe comes standard with our most popular features, namely, an adjustable top Accent Light, a 180 CFM convection fan, Ember-Glo™ ember bed lighting and the GreenSmart® Remote Control.

Insert Choices *See Pages 14-22*

- Wide array of designer faces
- Choice between Classic Oak Logs, Birch Logs or Driftwood Fyre-Art™
- Six optional fireback choices
- Choice of small and large one-piece panels. Custom fit panels are also available.
- Optional Hidden Wiring Kit allows you to hard wire the insert from within the firebox

Specifications

Heating Capacity:	Up to 1,500 Square Feet
Maximum BTU/HR Input:	31,000 (NG/LP)
Minimum BTU/HR Input:	11,300 (NG), 9,600 (LP)
Turn Down Ratio:	64% (NG), 69% (LP)
Steady State Efficiency:	Up To 85.11% (NG), 87.44% (LP)
P4 Canadian Efficiency:	75.22% (NG), 77.93% (LP)
Dimensions:	Height 19-5/8” (Front), 17" (Back) Width 26-3/8” (Front), 17-5/8" (Back) Depth 15-1/8”
Glass Viewing Area:	24-1/4" W x 12-3/4" H= 309 Sq. In.

Clearances To Combustibles & Hearth Protection

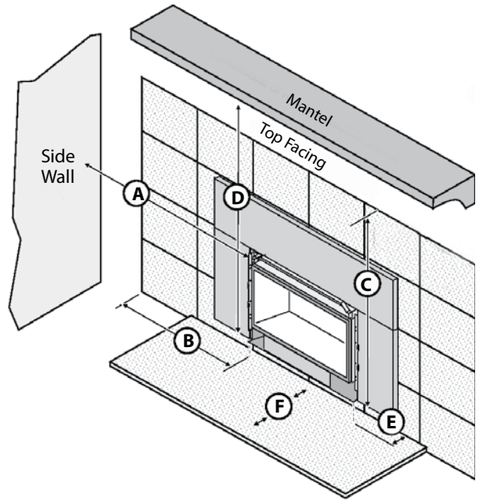

A	4-1/2″
B	4-1/2″
C	35″
D	35″
E	0" or 1-1/4″ with Trim Kit
F	0″

The 430 Deluxe shown with the FireplaceX® Shadowbox™ Face, Common Brick Fireback, Classic Oak Log Set, One-Piece Finish Panel and Hidden Wiring Kit

430 DELUXE WITH EMBER-GLO™ MID-SIZED GAS INSERT

Traditional 1,500 Square Foot Heater with Large Viewing Area

The 430 Deluxe is a beautiful insert that is ideal for providing supplemental heat to homes or living spaces up to 1,500 square feet. Featuring 430 square inches of ceramic glass, this model has a larger fireview than most inserts its size. The ceramic glass extends down to the hearth to offer a "clean face" look that resembles a traditional masonry fireplace. This model features Ember-Glo™ ember bed lighting, the Ember-Fyre®II burner and Comfort Control™ to accommodate your year-round heating requirements. More standard features include the GreenSmart® Remote Control, top Accent Light and a 180 CFM convection fan.

Insert Choices *See Pages 14-22*

- Wide array of designer faces
- Choice between Classic Oak Logs, Birch Logs or Driftwood Fyre-Art™
- Six fireback choices (required)
- Choice of small and large one-piece panels. Custom fit panels are also available.
- Optional Hidden Wiring Kit allows you to hard wire the insert from within the firebox

Specifications

Heating Capacity:	Up to 1,500 Square Feet
Maximum BTU/HR Input:	31,000 (NG/LP)
Minimum BTU/HR Input:	9,900 (NG), 7,500 (LP)
Turn Down Ratio:	68% (NG), 76% (LP)
Steady State Efficiency (High):	Up To 85.55% (NG), 86.50% (LP)
P4 Canadian Efficiency:	73.77% (NG), 74.73% (LP)
Dimensions:	Height 19-1/2" Width 29-1/2" (Front), 21" (Back), Depth 15"
Glass Viewing Area:	23" W x 16" H = 368 Sq. In.

Clearances To Combustibles & Hearth Protection

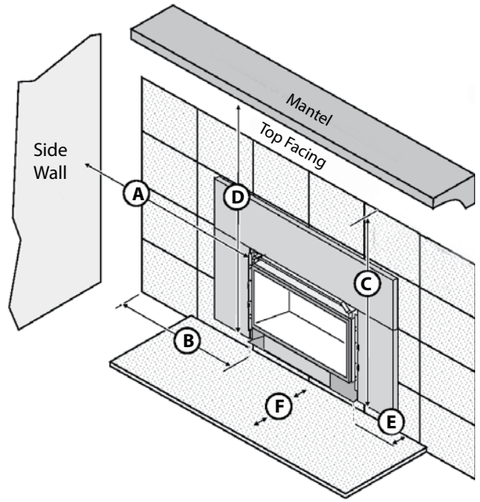

A	5"
B	3-3/8"
C	32-3/8"
D	34-1/2" = 12" Mantle Depth, 33-1/2" = 4" Mantle Depth
E	0" or 1-1/4" with Trim Kit
F	0"

The 34 DVL Deluxe shown with the Lopi® Times Square™ Face, Ledgestone Fireback, Classic Oak Log Set and Hidden Wiring Kit.

34 DVL DELUXE WITH EMBER-GLO™ LARGE GAS INSERT

Traditional 2,000 Square Foot Heater

The DVL Deluxe is our most popular gas insert and can heat up to 2,000 square feet. This model offers a generous ceramic glass viewing area and your choice of high definition log sets and designer faces. Comfort Control™ is a standard feature on this unit, which allows you to turn down the heat output while maintaining an attractive flame appearance. This Deluxe insert comes fully loaded with the Ember-Fyre® II Burner, realistic Ember-Glo™ ember bed lighting, GreenSmart® Remote Control, an adjustable top Accent Light and 180 CFM convection fan.

Insert Options *See Pages 14-22*

- Wide array of designer faces
- Choice between Classic Oak Logs, Birch Logs or Driftwood Fyre-Art™
- Six optional fireback choices
- Choice of small and large one-piece panels. Custom fit panels are also available.
- Optional Hidden Wiring Kit allows you to hard wire the insert from within the firebox

Specifications

Heating Capacity:	Up to 2,000 Square Feet
Maximum BTU/HR Input:	40,000 (NG/LP)
Minimum BTU/HR Input:	13,500 (NG), 9,600 (LP)
Turn Down Ratio:	64% (NG), 76% (LP)
Steady State Efficiency (High):	Up To 82.17% (NG), 83.81% (LP)
P4 Canadian Efficiency:	70.30% (NG), 72.81% (LP)
Dimensions:	Height 23-7/8” (Front), 21-3/8" (Back) Width 31-1/2” (Front), 20" (Back) Depth 14-1/2”
Glass Viewing Area:	27" W x 16-1/8"H = 437 Sq. In.

Clearances To Combustibles & Hearth Protection

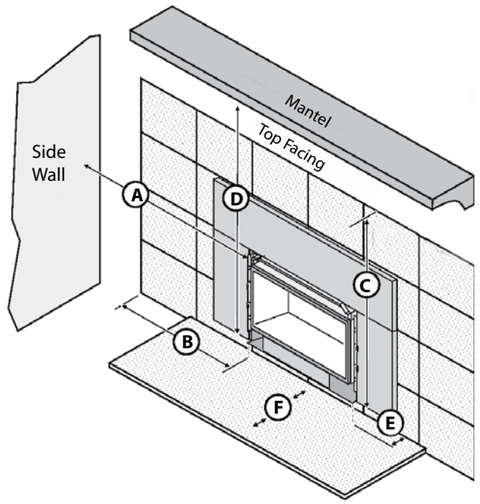

A	4″
B	4″
C	35-1/2″
D	35-1/2″
E	0″ or 1-1/4" with Trim Kit
F	0″

The 616 Deluxe shown with the Lopi® Profile™ Stainless Steel Face, Birch Log Set, Black Glass Fireback, One-Piece Finish Panel and Hidden Wiring Kit.

616 DELUXE WITH EMBER-GLO™ LARGE GAS INSERT

Traditional 2,000 Square Foot Heater with Large Viewing Area

The 616 Deluxe is an excellent heater and beautiful focal point for larger homes and grand spaces up to 2,000 square feet. This insert features our biggest fireview, with 616 square inches of ceramic glass that extends down to the hearth. This creates a "clean face" look with minimal metal facing and a larger fireview than other inserts its size. This model has a gorgeous flame appearance and comes standard with Ember-Glo™ ember bed lighting and the Ember-Fyre® II burner. The 616 also features a 180 CFM convection fan, the GreenSmart® Remote Control, top Accent Light and Comfort Control™, which gives you the flexibility to enjoy a beautiful fire with your desired heat output all year-round.

Insert Choices *See Pages 14-22*

- Wide array of designer faces
- Choice between Classic Oak Logs, Birch Logs or Driftwood Fyre-Art™
- Six fireback choices (required)
- Choice of small and large one-piece panels. Custom fit panels are also available.
- Optional Hidden Wiring Kit

Specifications

Heating Capacity:	Up to 2,000 Square Feet
Maximum BTU/HR Input:	39,000 (NG/LP)
Minimum BTU/HR Input:	12,000 (NG), 9,000 (LP)
Turn Down Ratio:	69% (NG), 77% (LP)
Steady State Efficiency (High):	Up To 83.88% (NG), 85.39% (LP)
P4 Canadian Efficiency:	71.19% (NG), 73.04% (LP)
Dimensions:	Height 23-5/16" Width 34" (Front), 24" (Back), Depth 16"
Glass Viewing Area:	27-3/4" W x 19-3/4" H = 543 Sq. In.

Clearances To Combustibles & Hearth Protection

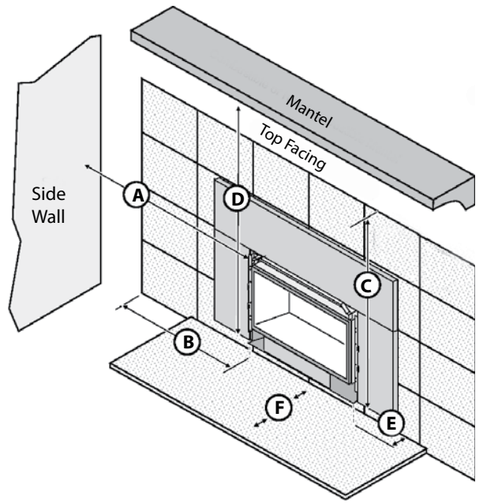

A	6"
B	5"
C	35-1/2"
D	36-1/2" with 12" Mantel 33" with 4" Mantel
E	0" or 1-1/4" with Trim Kit
F	0"

LOPI® 32 DVS & 34 DVL FACE COLLECTIONS

Both Lopi® and Fireplace Xtrordinair® feature their own unique architectural styles of rectangular and arched face designs. We invite you to take a look at our selection of designer faces and choose the style that best suits your home.

Times Square™ Face

32 DVS 31-1/8" W x 20-1/2" H
34 DVL 34" W x 24-1/2" H
Metallic Black Painted

Wilmington™ Face

32 DVS 32 1/4" W x 22 1/2" H
34 DVL 36" W x 27" H
Metallic Black Painted

Design your perfect fire at:
firebuilder.travisindustries.com

Our faces are painted with Stove Bright™ high temperature stove paint. The finish color in pictures may appear lighter than the actual color seen in your home setting. Ask your dealer to show you a sample of the actual paint finish.

Note: All faces intentionally show the same flame pattern so you can focus your attention on the architectural detailing of each face design.

Profile™ Face Collection

32 DVS 30-3/8" W x 20-7/8" H
34 DVL 34" W x 24-7/8" H

Metallic Black Painted Face

Metallic Black Painted Face and Bronze Painted Trim

Metallic Black Painted Face and Stainless Steel Trim

FIREPLACEX® 32 DVS & 34 DVL FACE COLLECTIONS

Note: All faces intentionally show the same flame pattern so you can focus your attention on the architectural detailing of each face design.

Classic Arch™ Face
32 DVS 30” W x 22” H
34 DVL 34-3/4” W x 26-1/2” H
Metallic Black Painted

French Country™ Face
32 DVS 30” W x 22” H
34 DVL 34-3/4” W x 26-1/2” H
Metallic Black Painted

Metropolitan™ Face
32 DVS 30” W x 22” H
34 DVL 34-3/4” W x 26-1/2” H
Metallic Black Painted

Shadowbox™ Face
32 DVS 30-3/8” W x 20-7/8” H
34 DVL 34” W x 24-7/8” H
Metallic Black Painted

CUSTOM SHOP FACE OPTIONS

Hand-Forged Charcoal Painted Each face is hand crafted by in-house blacksmiths through a skillful and labor intensive metal forging process. From start to finish this process requires focus, stamina and an artful eye. Every individual piece of metal is heated in a forge at extremely high temperatures, hand-hammered and worked multiple times to complete an authentic finished product with textured surfaces, hammered edges and incredible attention to detail. Each face is an individual custom work of art

Charcoal Painted Finish
Offers a unique alternative to the classic black painted look, featuring a more rich, lustrous metal finish.

Marcus, one of our master craftsmen, works on hand-forging parts for our beautiful Timberline™ face.

Artisan™ Face
34 DVL Only - 34-3/4” W x 26-1/2” H

Face Detail

Timberline™ Face
34 DVL Only - 33-3/4” W x 27” H

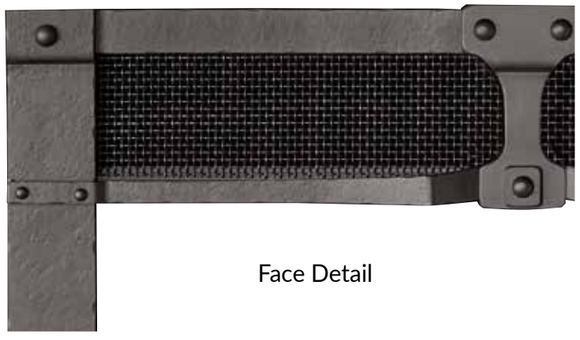

Face Detail

FIREPLACEX® & LOPI®
430 & 616 FACE COLLECTIONS

Both Lopi® and Fireplace Xtrordinair® feature their own unique architectural styles of rectangular and arched face designs. We invite you to take a look at our selection of designer faces and choose the style that best suits your home.

Our faces are painted with Stove Bright™ high temperature stove paint. The finish color in pictures may appear lighter than the actual color seen in your home setting. Ask your dealer to show you a sample of the actual paint finish.

Note: All faces intentionally show the same flame pattern so you can focus your attention on the architectural detailing of each face design.

FireplaceX® Metropolitan™ Face

430 31” W x 22” H
616 35-1/2” W x 25-5/8”H

Metallic Black Painted

Lopi® Wilmington™ Face Collection

430 31-1/8” W x 22” H
616 35-1/2” W x 25-3/4” H

Metallic Black Painted

Lopi® Profile™ Face Collection

430 31-1/8” W x 20-1/2” H
616 34” W x 24-1/2” H

Metallic Black Painted Face and Trim

Metallic Black Painted Face and Bronze Painted Trim

FireplaceX® Shadowbox™ Face Collection

430 31” W x 21” H
616 35-1/2” W x 24-5/8” H

Metallic Black Painted

Lopi® Times Square™ Face

430 31-1/8” W x 22” H
616 35-1/2” W x 25-3/4” H

Metallic Black Painted

Black Metallic Painted Face and Stainless Steel Trim

Design your perfect fire at:
firebuilder.travisindustries.com

LOG SET AND MEDIA OPTIONS

Highly Detailed
Classic Oak Log Set with Grate
10 Piece for 32 DVS and 430
10 Piece for 34 DVL and 616

Highly Detailed
Birch Log Set with Grate
10 Piece for 32 DVS and 430
10 Piece for 34 DVL and 616

Highly Detailed
Driftwood Fyre-Art™
7 Piece for 32 DVS and 430
9 Piece for 34 DVL and 616

FIREBACK OPTIONS

All models feature a selection of transitional firebacks to customize the interior look of your insert and provide a striking background for the media and glowing flames.

Firebacks are optional on the 32 DVS and 34 DVL and required on the 430 and 616 models.

HERRINGBONE BRICK
Common Brick is on backside

COMMON BRICK
Herringbone Brick is on backside

HANDMADE BRICK
Greystone is on backside

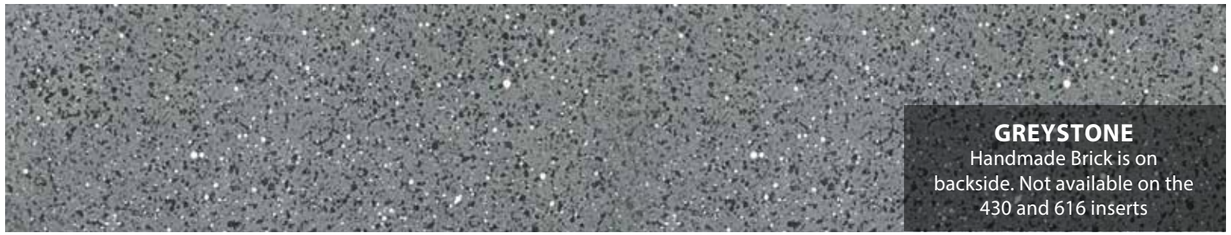

GREYSTONE
Handmade Brick is on backside. Not available on the 430 and 616 inserts

LEDGESTONE

BLACK GLASS

FINISH PANELS (REQUIRED EXCEPT ON UNIVERSAL FACES)

One-piece panels are available for all models and come in two sizes. Optional black trim is available that can reduce depth into firebox by 1-1/4".

One-Piece Finish Panels

Clean look with no seams. Available with optional black trim that can reduce depth into firebox by 1-1/4".

Shown: One-Piece Finish Panel with 616 Insert

32 DVS and 430

SMALL PANEL
38” W x 25” H

LARGE PANEL
40” W x 28-1/2” H

Custom Finish Panels

We also offer custom fit three-sided and four-sided finish panels to fit virtually any size fireplace opening. Ask your dealer for details.

Shown: 4-Sided Custom Panel with 616 Insert

34 DVL and 616

SMALL PANEL
42” W x 30-1/2” H

LARGE PANEL S
44” W x 34” H

Shown: 4-Sided Inside Fit Custom Panel with 34 DVL Insert

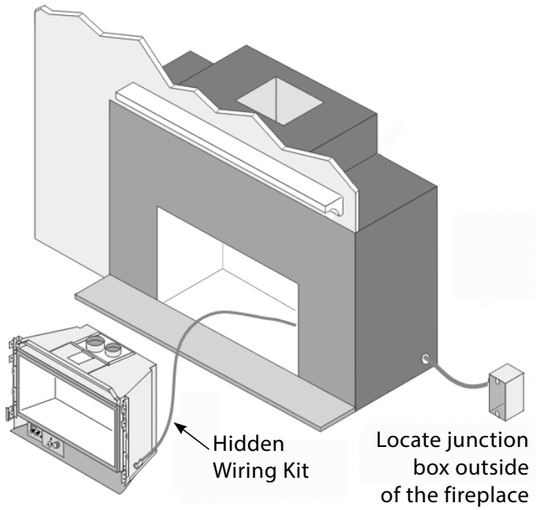

Hidden Wiring Kit

If you do not want the power cord running across your hearth, use our optional U.L. approved Hidden Wiring Kit. This kit allows you to have a hard-wire electrical connection within your existing fireplace for a safe and cord free installation.
Available for all gas insert models.

MADE IN AMERICA

Our fireplace inserts are proudly manufactured in America at The House of Fire. If you’re ever in the Seattle area, we invite you to take a free tour of The House of Fire world-class manufacturing plant. You will meet the artisans, engineers, craftsmen and craftswomen who design and hand build these fabulous fireplaces. Wear comfortable shoes, the factory is eleven acres indoors!

BE YOUR OWN DESIGNER

With our New & Enhanced Design My Fire Web App

Pick your insert, accessories, and extras then snap a photo of your room and upload it to the app to see what your new fire will look like in your room! Visit our website at

FIREBUILDER.TRAVISINDUSTRIES.COM

7-YEAR “REAL WORLD” WARRANTY

Our 7-Year Warranty offers more protection on key components than the so-called “Limited Lifetime” warranties of our competitors. Lopi® and Fireplace Xtrordinair® build inserts to last a lifetime.

We’ll stand behind the quality and performance of our products year after year because that’s the way we do business - and you don’t have to read the fine print for your peace of mind. We even continue to sell service parts that date back 40 years.

YEARS 1-2: All parts and labor on your appliance, including blower.

YEARS 3-5: All parts and labor on the firebox, door assembly and air control assemblies.

YEARS 6-7: Parts only on firebox, door and air control assemblies.

YOUR SAFETY IS OUR NUMBER ONE CONCERN

All of our gas inserts are very safe to own and operate in your home.

Lopi® and Fireplace Xtrordinair® gas insert faces come standard with ANSI-compliant ClearFireTM glass screens. This provides a safety barrier that protects against accidental contact with the hot glass surfaces and reduces the potential for injury. These screens are practically invisible and are so discrete that they do not detract from the fire view in any way.

GREENSMART™

All of our Deluxe Gas Inserts in this catalog feature the patented GreenSmart® System. This proprietary system is the most innovative collection of components, controls, and technology that when combined provides an elegant, greener, and smarter way to heat your home.

GreenSmart® Deluxe Multi-Function Wireless Thermostat Remote Control

- Two Thermostat Modes
- Change Between IPI GreenSmart® and CPI Pilot Modes
- Flame Adjustment (6 levels)
- Convection Fan Operation (6 levels)
- Accent Lights (6 levels)
- Comfort Control™ (Controls rear burner)
- Ember-Glo™ ember bed lighting

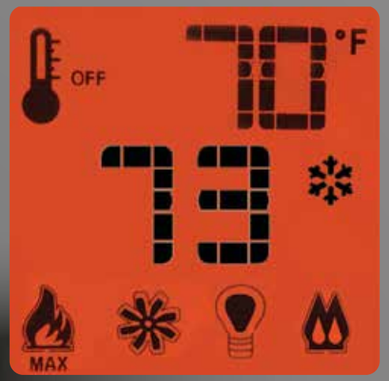

Manual Setting ON/OFF
Fire and fan stay where you manually set it.

Thermostat Setting
Fireplace turns ON or OFF to maintain your desired home/room temperature.

Smart Thermostat Setting
Automatically adjusts the flame height based on the temperature setting, so the flame will modulate up/down as opposed to shutting ON/OFF like normal thermostats. This setting conserves fuel and maximizes the unit's heating ability while extending the viewing pleasure of the fire.

Choice of Pilot Modes - Easily Switch Between IPI & CPI Modes:

IPI GreenSmart®- Intermittent Pilot Mode
Use in summer or milder heating days to reduce gas consumption from the pilot. The pilot only turns on when the unit calls for heat, saving more energy.

CPI - Continuous Pilot Mode
Use in fall/winter or in cold climate areas. CPI keeps the pilot on at all times. This warms the vent system to maintain a strong draft in your chimney and reduce moisture condensation on the glass. This system includes a battery back-up, ensuring proper ignition, even during power outages.

Flame Adjustment
Adjust the height/heat of the flame.
6 levels of flame heights to choose from.

Convection Fans
Circulate room air around the firebox and deliver heated air into your home.
6 speeds to choose from.

Accent Lights
This feature adds a warm glow to both the logs and fireplace interior, and can be used when the fire is on or off. Perfect as a nightlight or soft indirect lighting for the room, the Accent Light allows for visual enhancement of your fireplace 365 days a year. 6 levels to choose from.

Accent Lights Off

Accent Lights On

Comfort Control™
Comfort Control™ turns off the rear burner while leaving the front burner on for an attractive flame when heat output is not the priority. This feature offers a turn-down ratio of up to 75 percent and offers a more efficient way to heat your home by only burning the correct amount of fuel to keep a constant room temperature.

Ember-Glo™
Ember-Glo™ combines adjustable halogen under-lighting with colored glass and embers in front of the fire to provide an amazingly realistic ember bed effect.

FEATURES & SPECIFICATIONS

FEATURES YOU'RE GOING LOVE	MEDIUM 32 DVS DELUXE	MEDIUM 430 DELUXE
Ember-Fyre® II Burner	YES	YES
GreenSmart™ Remote	YES	YES
Comfort Control	YES	YES
Accent Lights	YES (Top, Front Ember-Glo™)	YES (Top, Front Ember-Glo™)
Flex Vent Diameter	3" Exhaust - 3" Air Intake	3" Exhaust - 3" Air Intake
Unit Weight	115 lbs.	106 lbs.
Glass Viewing Area *(viewing glass will vary slightly with face design)*	24-1/4" W x 12-3/4" H 309 sq. in.	23" W x 16" H 368 sq. in.
Powerful Convection Fans	180 CFM	180 CFM
PERFORMANCE	*Heating Capacity can be affected by negative pressure in the home and by prevailing atmospheric conditions. Contact local building or fire officials about restrictions and installation requirements in your area.	
Heating Capacity*	Up to 1,500 square feet	Up to 1,500 square feet
BTU Input (NG)	31,000 (high) - 11,300 (low)	31,000 (high) - 9,900 (low)
BTU Input (LP)	31,000 (high) - 9,600 (low)	31,000 (high) - 7,500 (low)
Turn Down Ratio	64% (NG), 69% (LP)	68% (NG), 76% (LP)
Steady State Efficiency Up To (High) *Steady State Efficiency determined using maximum venting*	85.11% (NG), 87.44% (LP)	85.55% (NG), 86.50% (LP)
Canada Energuide Efficiency *FE Efficiency determined using CSA P.4.1-15.*	75.22% (NG), 77.93% (LP)	73.77% (NG), 74.73% (LP)
AFUE Efficiency	84.10% (NG), 85.40% (LP)	81.80% (NG), 80.70% (LP)
FIREPLACE REQUIREMENTS	Installation information is available at your local dealer or online at www.travisIndustries.com	

	ONE PIECE PANEL	ONE PIECE PANEL W/TRIM	ONE PIECE PANEL	ONE PIECE PANEL W/TRIM
A = Minimum Height	20-5/8" (524mm)	19-1/2" (496mm)	20-1/4" (515mm)	19-3/4" (502mm)
B = Minimum Width	FRONT 29" (737mm) REAR 18" (458mm)	FRONT 26-1/2" (674mm) REAR 18" (458mm)	30-1/2" (775mm)	30-1/4" (768mm)
C = Minimum Depth	16-3/8" (416mm) 16-7/8" (429mm) W/Arch Faces	15-1/8" (385mm) 15-5/8" (397mm) W/Arch Faces	15-1/2" (394mm)	14-1/4" (357mm)
D = Hearth Extension	0"	1-1/4" (32mm)	0"	1-1/4" (32mm)

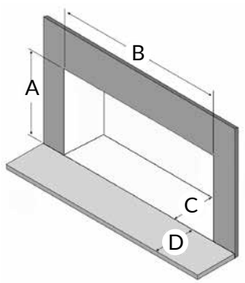

YOUR FIREPLACE

A Height = _____
B Width Front = _____
Width Back = _____
C Depth = _____
D Hearth = Extension _____

SURROUND PANEL SIZES	Measurements for each panel is for maximum fireplace opening coverage. 3 and 4 sided Custom Fit Panels are available from your Fireplace Xtrordinair® or Lopi® dealer.	
One Piece Small	38" W x 25" H	38" W x 25" H
One Piece Large	40" W x 28-1/2" H	40" W x 28-1/2" H

32 DVS Deluxe Dimensions

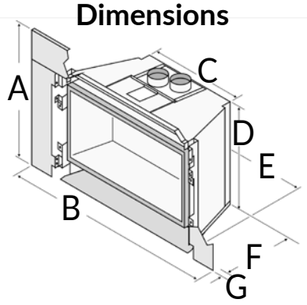

A	Small Panel 25" (635mm) Large Panel 28-1/2" (711mm)
B	Small Panel 38" (965mm) Large Panel40" (1,016mm)
C	17-5/8" (448mm)
D	19-5/8" (498mm) Front 17" (432mm) Back
E	26-3/8" (671mm) Front 17-5/8" (448mm) Back
F	15-1/8" (384mm)
G	0" with 1 piece panel 1-1/4" (32mm) when using 1 piece panel with trim

430 Deluxe Dimensions

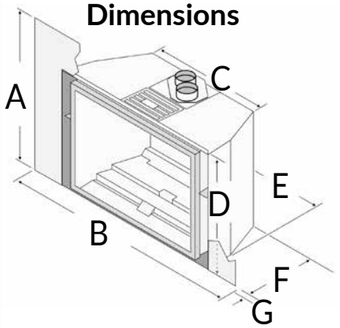

A	Small Panel 25" (635mm) Large Panel 28-1/2" (724mm)
B	Small Panel 38" (966mm) Large Panel 40" (1016mm)
C	21" (534mm)
D	19-1/2" (496mm)
E	29-1/2" (750mm)
F	15" (381mm)
G	0" with 1 piece panel 1-1/4" (32mm) when using 1 piece panel with trim

FEATURES & SPECIFICATIONS

FEATURES YOU'RE GOING LOVE	LARGE 34 DVL DELUXE	LARGE 616 DELUXE
Ember-Fyre® II Burner	YES	YES
GreenSmart™ Remote	YES	YES
Comfort Control	YES	YES
Accent Lights	YES (Top, Front Ember-Glo™)	YES (Top, Front Ember-Glo™)
Flex Vent Diameter	4" Exhaust - 3" Air Intake	4" Exhaust - 3" Air Intake
Unit Weight	135 lbs.	133 lbs.
Glass Viewing Area *(viewing glass will vary slightly with face design)*	27-3/4" W x 17" H 472 sq. in.	27-3/4" W x 19-3/4" H 543 sq. in.
Powerful Convection Fans	180 CFM	180 CFM
PERFORMANCE	*Heating Capacity can be affected by negative pressure in the home and by prevailing atmospheric conditions. Contact local building or fire officials about restrictions and installation requirements in your area.	
Heating Capacity*	Up to 2,000 square feet	Up to 2,000 Square feet
BTU Input (NG)	40,000 (high) - 13,500 (low)	39,000 (high) - 12,000 (low)
BTU Input (LP)	40,000 (high) - 9,600 (low)	39,000 (high) - 9,000 (low)
Turn Down Ratio	64% (NG), 76% (LP)	69% (NG), 77% (LP)
Steady State Efficiency Up To (High) *Steady State Efficiency determined using maximum venting*	82.17% (NG), 83.81% (LP)	83.88% (NG), 85.39% (LP)
Canada Energuide Efficiency *FE Efficiency determined using CSA P.4.1-15.*	70.30% (NG), 72.81% (LP)	71.19% (NG), 73.04% (LP)
AFUE Efficiency	75.90% (NG), 77.00% (LP)	74.10% (NG), 73.70% (LP)
FIREPLACE REQUIREMENTS	Installation information is available at your local dealer or online at www.travisIndustries.com	

	ONE PIECE PANEL	ONE PIECE PANEL W/TRIM	ONE PIECE PANEL	ONE PIECE PANEL W/TRIM
A = Minimum Height	24-7/8" (632mm)	23-3/4" (604mm)	24" (610mm)	23-1/2" (597mm)
B = Minimum Width	FRONT 32-1/2" (826mm) REAR 20" (508mm)	FRONT 31-1/2" (800mm) REAR 20" (508mm)	35" (889mm)	34-5/8" (880mm)
C = Minimum Depth	15-3/4" (400mm) 16-1/4" (413mm) W/Arch Faces	14-1/2" (369mm) 15" (381mm) W/Arch Faces	16-1/2" (420mm)	15-1/4" (387mm)
D = Hearth Extension	0"	1-1/4" (32mm)	0"	1-1/4" (32mm)

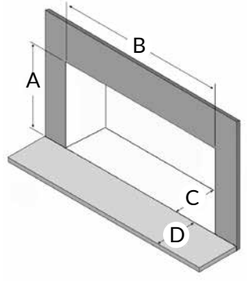

YOUR FIREPLACE

A Height = _____
B Width Front = _____
Width Back = _____
C Depth = _____
D Hearth = Extension _____

SURROUND PANEL SIZES	Measurements for each panel is for maximum fireplace opening coverage. 3 and 4 sided Custom Fit Panels are available from your Fireplace Xtrordinair® or Lopi® dealer.	
One Piece Small	42" W x 30-1/2" H	42" W x 30-1/2" H
One Piece Large	44" W x 34" H	44" W x 34" H

34 DVL Deluxe Dimensions

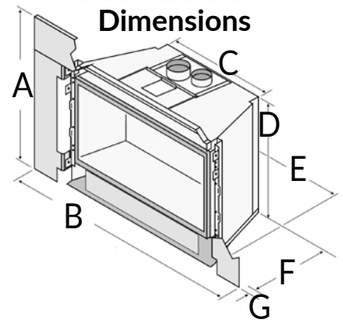

A	Small Panel 30-1/2" (775mm) Large Panel 34" (864mm)
B	Small Panel 42" (1067mm) Large Panel 44" (1118mm)
C	20" (508mm)
D	23-7/8" (543mm) Front 21-3/8 (543mm) Back
E	31-1/2" (801mm)
F	14-1/2" (369mm)
G	0" with 1 piece panel 1-1/4" (32mm) when using 1 piece panel with trim

616 Deluxe Dimensions

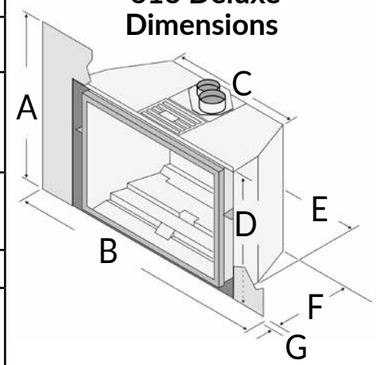

A	Small Panel 30-1/2" (775mm) Large Panel 34" (864mm)
B	Small Panel 42" (1067mm) Large Panel 44" (1118mm)
C	24" (610mm)
D	23-5/16" (592mm)
E	34" (864mm)
F	16" (406mm)
G	0" with 1 piece panel 1-1/4" (32mm) when using 1 piece panel with trim

PROFESSIONAL HEARTH DEALERS

Only the most professional specialty hearth retailers are selected to sell Fireplace Xtrordinair® and Lopi® fireplace inserts. They represent our total commitment to exceptional products and excellent service. In addition, they have successfully completed special training programs in the proper selection, installation, and service of all Fireplace Xtrordinair® and Lopi® products.

Your professional Fireplace Xtrordinair® and Lopi® hearth dealers are experts who can advise you on everything from customizing the color of your appliance to selecting appropriate venting and chimney materials.

ADDITIONAL HEARTH PRODUCTS

Fireplace Xtrordinair® and Lopi® produce a wide variety of quality wood, pellet and gas appliances.
Find your favorite fire today by visiting: www.TravisIndustries.com.

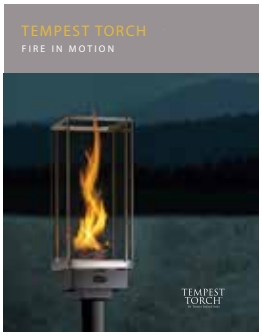

TESTED & CERTIFIED

ANSI Z21.88-2014/CSA 2.33-2016 "Vented Gas Fireplace Heater", CGA 2.17-M91 (R2009) "Gas Burning Heating Appliances for Manufactured Homes", and CSA P.4.1-15 Testing method for measuring annual fireplace efficiency. We recommend all Fireplace Xtrordinair® and Lopi® appliances be installed and maintained on an annual basis by your Specialty Hearth Retailer.

Improper installation of your gas appliance or failure to operate it in accordance to the guidelines detailed in the Owner's Manual may negate your warranty and endanger your home and family. Installation information is available on our website at www.TravisIndustries.com.

YOUR AUTHORIZED DEALER:

TRAVIS INDUSTRIES
THE HOUSE OF FIRE

Manufactured by
Travis Industries,
Mukilteo, WA

WILKSTOVE

We reserve the right to change and improve our product at any time without prior notification. Please refer to the Owner's Installation Manual for complete installation requirements.
Photos and illustrations are for descriptive purposes only . Fireplace Xtrordinair® and Lopi® Gas Fireplaces are protected by one or more of the following patents;
U.S. 8,469,021, 7,066,170, 6,602,068, 6,443,726, 6,953,037; Canada 2755517 as well as other U.S. and Foreign Patents Pending.
Copyright ©08/2021 • #98801037