# Radiant Plus™

## Gas Fireplace Inserts

### Available in
### On Demand Millivolt (MV)
### and GreenSmart® basic (IPI) Models

# Radiant Plus™
## Gas Fireplace Inserts

## Turn Your Fireplace into a Reliable Heat Source

The Radiant Plus™ Gas Inserts are engineered to install into your existing fireplace and designed to provide comforting RADIANT heat PLUS Natural Convection, delivering optimum warmth throughout your home.

RADIANT heat is the cozy, satisfying warmth you can actually feel from any source of heat, such as sitting in front of a campfire or soaking up the rays of the sun. NATURAL CONVECTION occurs as room air in the convection chamber is heated. This heated air rises, drawing cooler room air into the chamber, which in turn heats up and circulates around the firebox continuously.

## Reasonably Priced

With Radiant Plus™, you get MORE HEAT FOR LESS MONEY; that's more features and benefits than any other value-priced gas inserts available, making them both a beautiful and economical way to heat your home!

Radiant Plus™ gas inserts are available in two sizes: Medium and Large.
(Both shown with Times Square™ Face)

*Radiant Plus™ Medium is shown with the Designer™ Face and a three-sided one-piece surround panel.*

# Radiant Plus™ Medium Insert

1,250 Square Foot Heater

The Radiant Plus™ Medium is great for heating mid-sized homes. This insert is the perfect medium size to install in most metal (zero clearance) and masonry fireplaces. It features a large, beautiful fire viewing area and provides excellent radiant and natural convection heat.

## Specifications

| | |
|---|---|
| Heating Capacity*: | Up to 1,250 Square Feet |
| Maximum BTU/HR Input: | 25,000 (NG/LP) |
| Minimum BTU/HR Input: | 13,000 (NG/LP) |
| Steady State Efficiency (High): | MV Model Up to: 86.98% (NG), 89.03% (LP) |
| | GSB Model Up to: 86.98% (NG), 89.03% (LP) |
| P4 Canadian Efficiency: | MV Model Up to: 74.15% (NG), 75.07% (LP) |
| | GSB Model Up to: 75.11% (NG), 76.05% (LP) |
| AFUE Efficiency: | MV Model Up to: 80.3% (NG), 79.5% (LP) |
| | GSB Model Up to: 80.3% (NG), 79.5% (LP) |
| Glass Area: | 24-1/4" W x 12-3/4" H (309 Sq. In.) |

## MINIMUM FIREPLACE REQUIREMENTS

| | | My Fireplace Dimensions |
|---|---|---|
| A - Height (Front) | 19-3/4" (502mm) | _____ |
| B - Width (Front) | 27" (686mm) | _____ |
| Width (Back) | 17-1/4" (438mm) | _____ |
| C - Depth | 15" (381mm) | _____ |
| D - Hearth | Not Required | _____ |

E - The gas line should be installed prior to installing the heater.

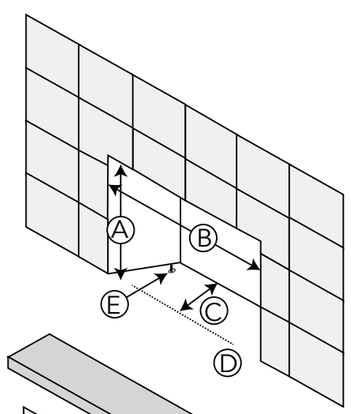


## CLEARANCES TO COMBUSTIBLES & HEARTH PROTECTION

| | |
|---|---|
| F - Sidewall to Insert | 5" (127mm) |
| G - Side Facing to Insert | 5" (127mm) |
| H - Top Facing to Insert | 33" (838mm) |
| I - Mantel, 5"- 12" Depth | 34" (864mm) |
| Mantel, 0"- 4" Depth | 33" (838mm) |
| J - Hearth Extension | Not Required |

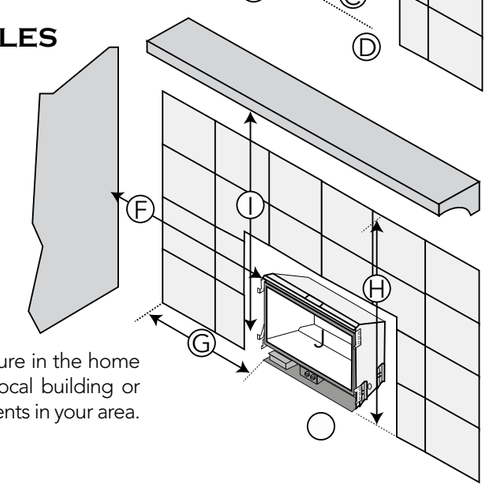


*Heating Capacity can be affected by negative pressure in the home and by prevailing atmospheric conditions. Contact local building or fire officials about restrictions and installation requirements in your area.

*Radiant Plus™ Large is shown with the Universal™ face and optional Brick Fireback. The Universal™ face does not require an additional surround panel to cover your fireplace opening.*

# Radiant Plus™ Large Insert

1,650 Square Foot Heater

The Radiant Plus™ Large is an excellent choice for heating larger living spaces. This is our most powerful Radiant Plus™ Insert. This model showcases a huge viewing area, the highest heat output, and a realistic, wood burning fire display. The Radiant Plus™ Large insert is a serious heater and makes a beautiful focal point in any room.

## Specifications

| | |
|---|---|
| Heating Capacity*: | Up to 1,650 Square Feet |
| Maximum BTU/HR Input: | 33,000 (NG) 31,000 (LP) |
| Minimum BTU/HR Input: | 17,000 (NG) 15,500 (LP) |
| Steady State Efficiency (High): | MV Model Up to: 87.81% (NG), 87.94% (LP) |
| | GSB Model Up to: 87.81% (NG), 89.94% (LP) |
| P4 Canadian Efficiency: | MV Model Up to: 74.43% (NG), 75.47% (LP) |
| | GSB Model Up to: 75.17% (NG), 76.26% (LP) |
| AFUE Efficiency: | MV Model Up to: 79.4% (NG), 81.1% (LP) |
| | GSB Model Up to: 79.4% (NG), 81.1% (LP) |
| Glass Area: | 27-3/4" W x 16-1/4" H (452 Sq. In.) |

## MINIMUM FIREPLACE REQUIREMENTS

| | | My Fireplace Dimensions |
|---|---|---|
| A - Height (Front) | 23-3/4" (603mm) | _____ |
| B - Width (Front) | 31" (787mm) | _____ |
| Width (Back) | 21-1/4" (540mm) | _____ |
| C - Depth | 15" (381mm) | _____ |
| D - Hearth | Not Required | _____ |

E - The gas line should be installed prior to installing the heater.

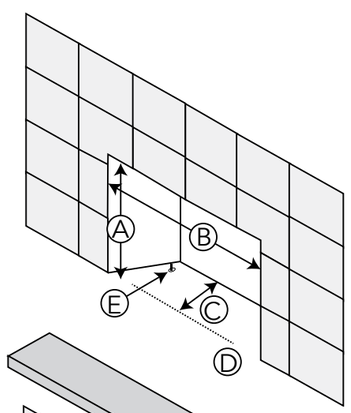


## CLEARANCES TO COMBUSTIBLES & HEARTH PROTECTION

| | |
|---|---|
| F - Sidewall to Insert | 5" (127mm) |
| G - Side Facing to Insert | 5" (127mm) |
| H - Top Facing to Insert | 38" (966mm) |
| I - Mantel, 0"-12" Depth | 36 1/2" (928mm) |
| J - Hearth Extension | Not Required |

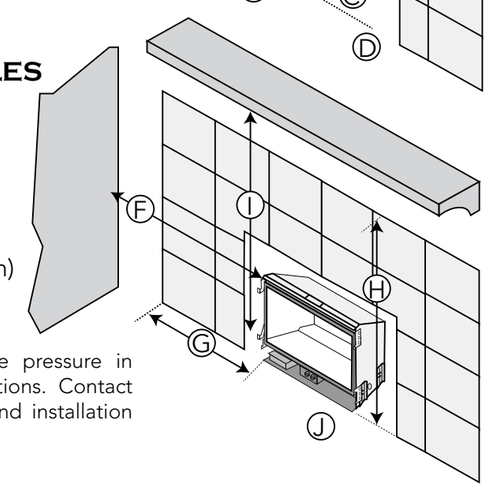


*Heating Capacity can be affected by negative pressure in the home and by prevailing atmospheric conditions. Contact local building or fire officials about restrictions and installation requirements in your area.

# Radiant Plus™ Gas Inserts
## Offer Features You're Going To Love!

- The Dancing-Fyre™ burner and Classic Log Set are incredibly realistic and mimic an actual wood burning fire, right down to the flame pattern, highly detailed logs, and glowing ember bed.
- These inserts feature a direct vent chimney system. All combustion air is drawn from outside your home, and all combustion byproducts are then vented out of your home through a new chimney liner.
- Heavy duty 16 & 18 gauge steel construction offers years and years of dependable service.
- High-temperature ceramic glass.
- Basic controls and simple functionality make these inserts easy to operate and live with.
- Offered as a choice of either an On Demand Standing Pilot MV control or a GreenSmart® Basic (IPI) control system. Ask your Authorized Lopi® Dealer for a demonstration of both systems to determine which best suits you.
- Built-in pilot fuel conservation timer helps conserve fuel and save money by turning the pilot off when the unit is not used for seven consecutive days.
- 50% flame and heat turndown.
- No electricity required to own or operate these inserts, keeping your family warm during a power outage.

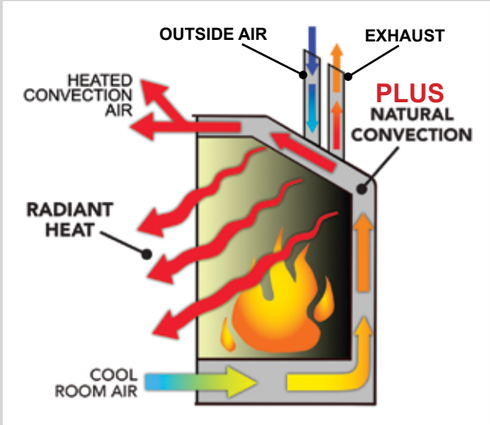


### RADIANT PLUS NATURAL CONVECTION

Our Radiant Plus™ gas inserts have been designed to provide comforting RADIANT heat PLUS the addition of Natural Convection around the firebox for the maximum transfer of warmth into your home.

## CHOOSING THE RIGHT INSERT FOR YOUR HOME

Your Authorized Lopi® Dealer will determine which Radiant Plus™ Insert and surround panel will best fit with your existing fireplace.

Choose your desired style of face and options. Your Authorized Lopi® Dealer will take care of the delivery and proper installation of your new beautiful fireplace insert.

1. Your existing fireplace
2. The proper sized Radiant Plus™ installs into your fireplace
3. Your existing chimney gets relined with a new metal Direct Vent Kit.
4. A set of surround panels will prevent room air form escaping up the chimney
5. Select your favorite Face and options
6. Welcome to the 'Great Indoors', your family will love the warmth and fire light for years.

*Radiant Plus™ Large is shown with the Times Square™ face and optional Brick Fireback.*

*Radiant Plus™ Medium is shown with the Universal™ face. The Universal™ face does not require an additional surround panel to cover your fireplace opening.*

*Detailed Dancing-Fyre™ Burner & Log Set*

*Optional Ceramic Brick Fireback*

Not available on Radiant Plus™ Small

*Optional Remote Control Thermostat*

The optional Remote is easy-to-use and features two convenient operation modes.
1. Manual On/Off 2. Thermostat Control

## FACE CHOICES

All faces feature a nearly invisible ANSI compliant safety screen.

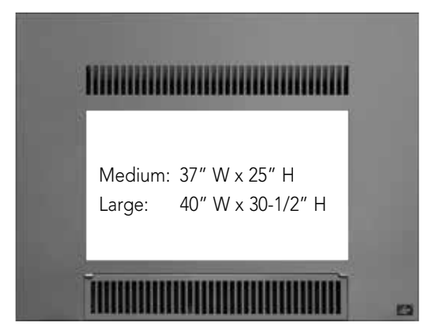


Universal Face™
(Surround panel not required with this face)

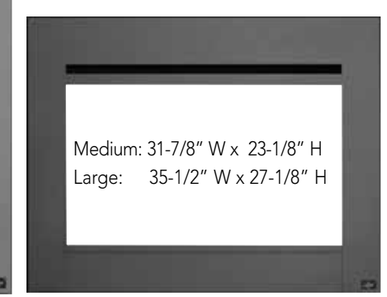


Times Square™ Face

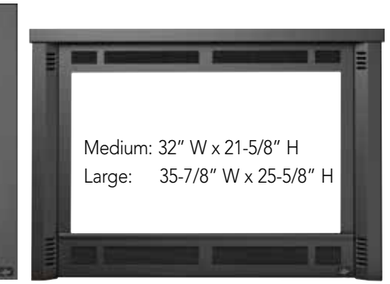


Designer™ Face

## SURROUND PANEL OPTIONS

One-Piece Surround Panels are available for all three faces.

- RADIANT PLUS™ MEDIUM Panels: Small 38" W x 25" H Large 40" W x 28-1/2" H
- RADIANT PLUS™ LARGE Panels: Small 42" W X 30-1/2" H Large 44" W X" 34 H
- Custom Fit 3-Sided and 4-Sided Panels are also available through your Authorized LOPI® dealer.

## CONVECTION FAN OPTION

100 CFM "Set It and Forget It" Fan; automatically turns on and off to heat your room at your preferred heat comfort level.

Your Authorizedl Lopi® Dealers are experts who can advise you on everything from customizing the color of your appliance to selecting appropriate venting and chimney materials. They can demonstrate Lopi® models on display, including working models actually burning.

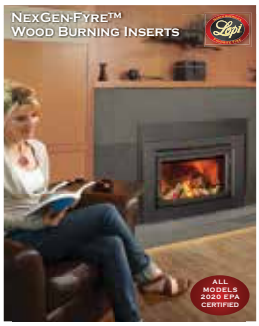

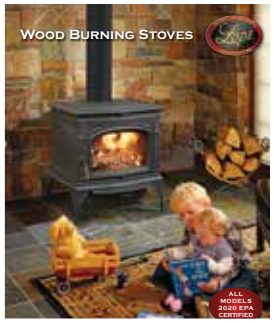

Lopi® produces a wide variety of quality wood, pellet, and gas stoves and fireplace inserts.
Find your favorite fire today by visiting: www.lopistoves.com.

## LOPI® FIRE BUILDER™

Customize the right insert for you by visiting our website at www.lopistoves.com. The Lopi® Fire Builder™ can help you select the options for your insert.

## KEEP THEM WARM, KEEP THEM SAFE

All Lopi® Gas Insert faces come with a built-in ANSI compliant safety screen. These screens are designed to be virtually invisible and prevent accidental contact with the hot glass surface on the fireplace insert. You may want to take additional safety measures such as adding a fire screen in front of your insert if you have small children living in or visiting your home. These precautions will allow everyone in your home to safely enjoy the comfort and warmth of your new gas insert.

---

### Your Lopi® Authorized Dealer:

WILK STOVE

www.lopistoves.com
Manufactured by
Travis Industries Inc.,
in Mukilteo, WA

Lopi® Gas Stoves and Inserts are protected by one or more of the following patents; U.S. 8,469,021, 7,066,170, 6,602,068, 6,443,726, 6,953,037; Canada 2755517 as well as other U.S. and Foreign Patents pending. Lopi® reserves the right to alter or improve its products at any time without notification. All trademarks belong to Travis Industries. For installation specifications refer to the Owner's Manual found on the Lopi® website.

05/2021 Printed in U.S.A. - #98800754